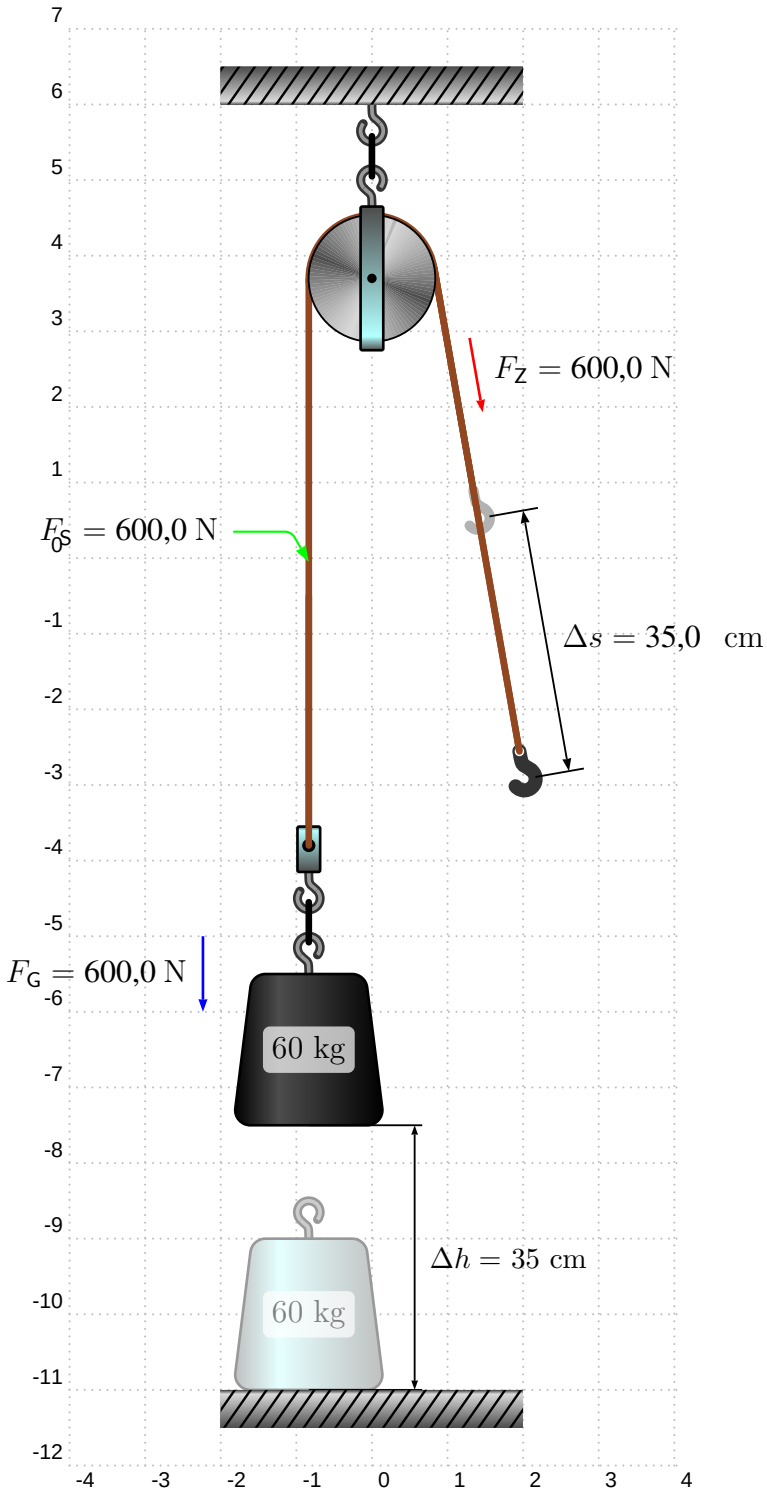
$F_Z = 600{,}0$ N
$F_S = 600{,}0$ N
$\Delta s = 35{,}0$ cm
$F_G = 600{,}0$ N
60 kg
60 kg
$\Delta h = 35$ cm

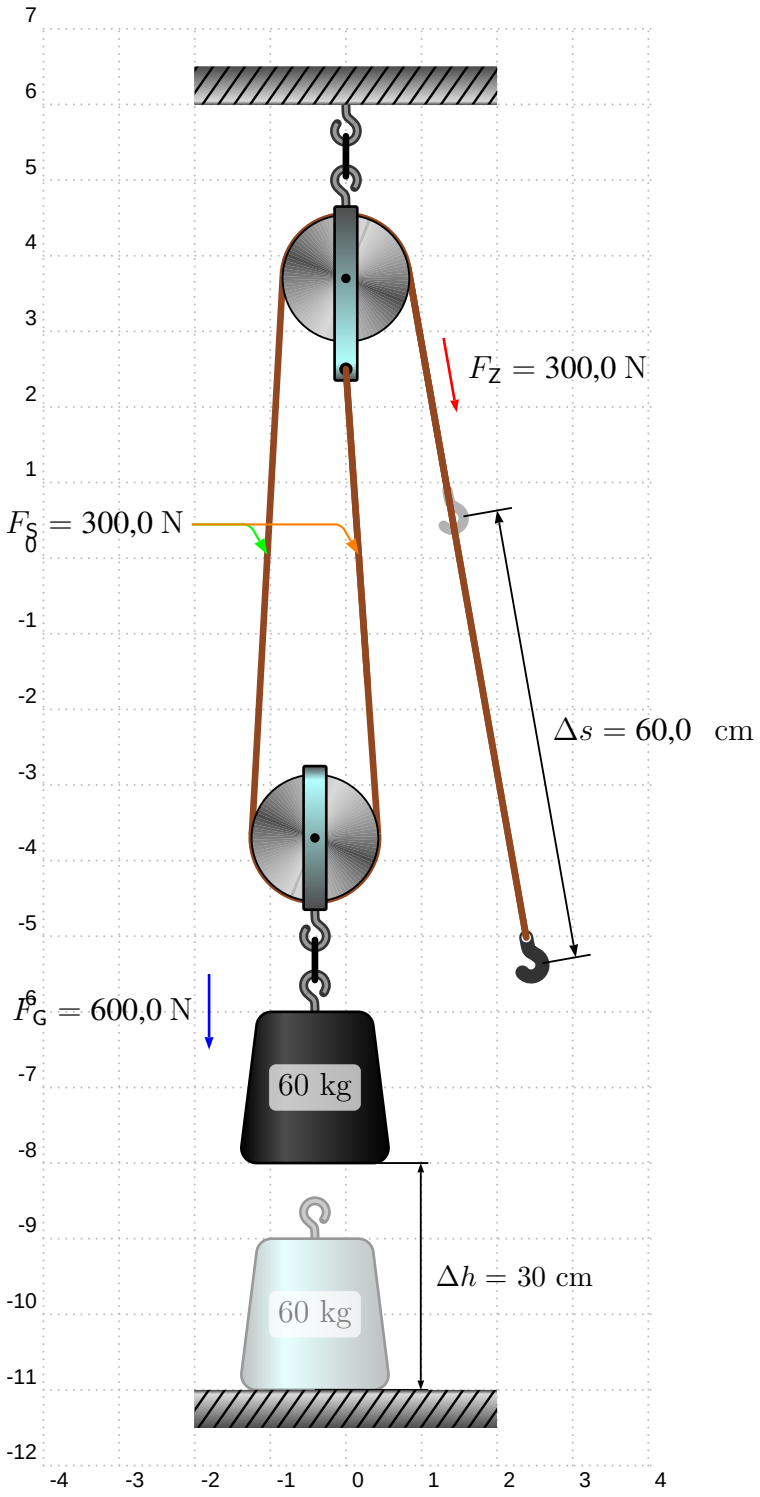
$F_Z = 300{,}0$ N
$F_S = 300{,}0$ N
$\Delta s = 60{,}0$ cm
$F_G = 600{,}0$ N
60 kg
60 kg
$\Delta h = 30$ cm

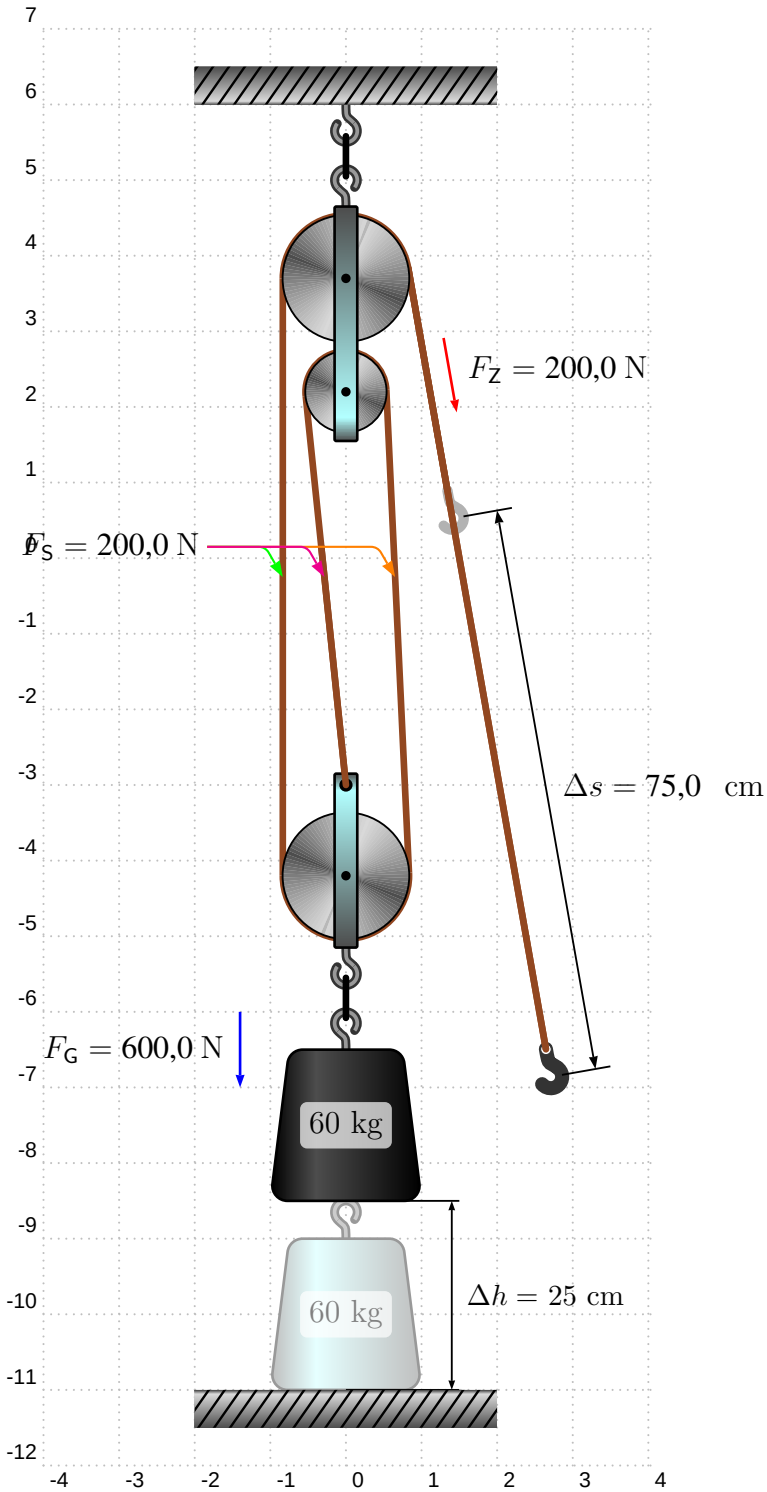
$F_Z = 200{,}0$ N
$F_S = 200{,}0$ N
$\Delta s = 75{,}0$ cm
$F_G = 600{,}0$ N
60 kg
60 kg
$\Delta h = 25$ cm

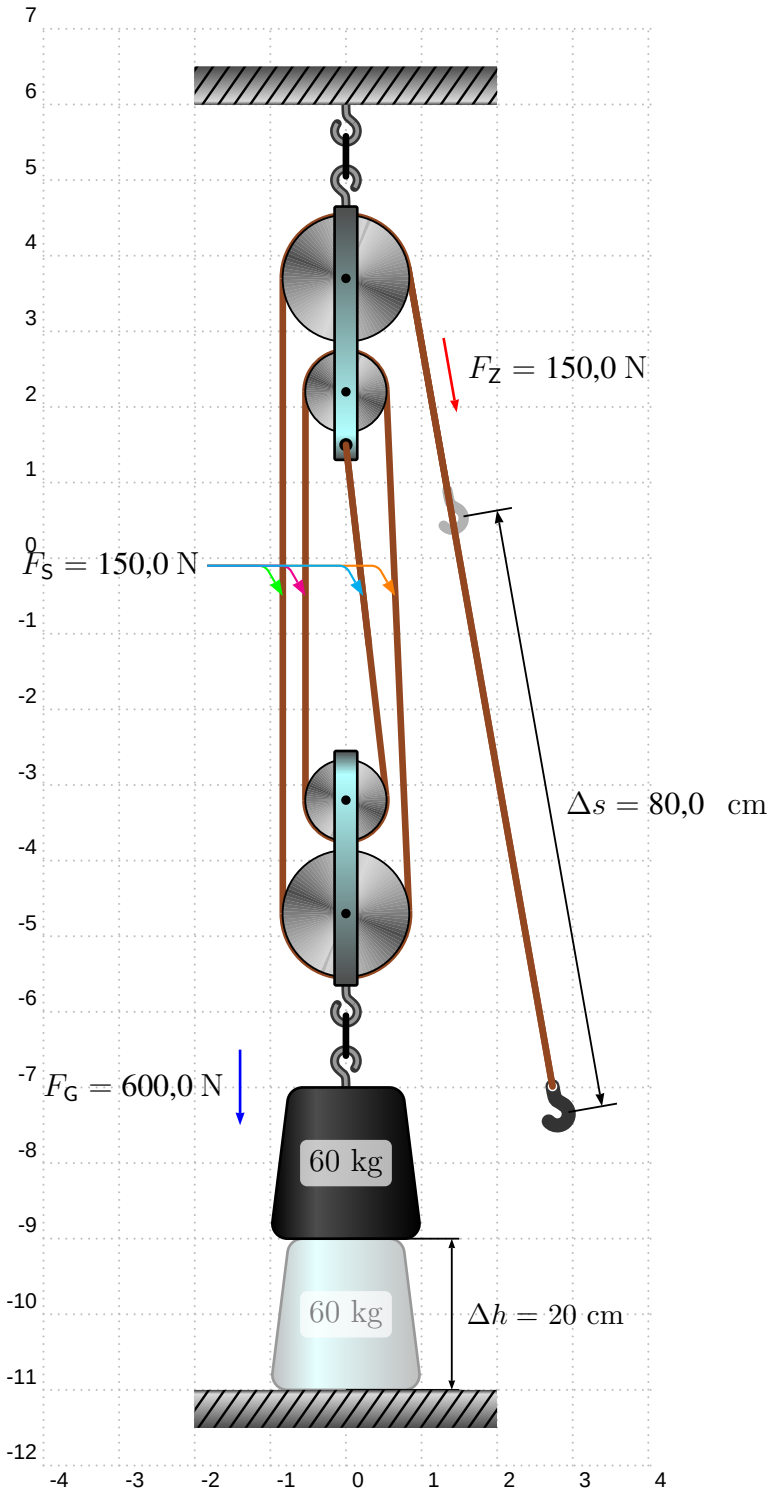
$F_Z = 150{,}0$ N
$F_S = 150{,}0$ N
$\Delta s = 80{,}0$ cm
$F_G = 600{,}0$ N
60 kg
60 kg
$\Delta h = 20$ cm

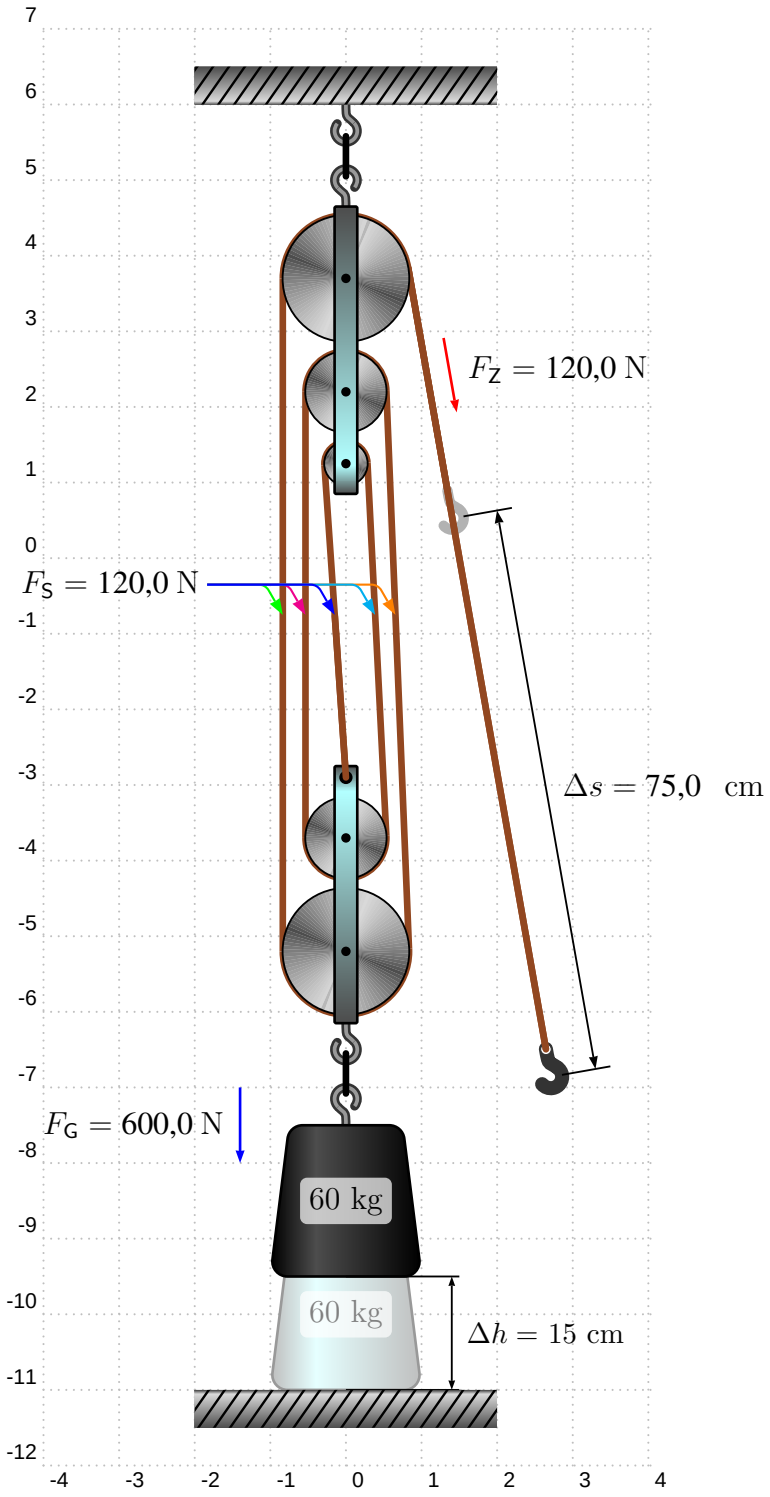
$F_Z = 120{,}0$ N
$F_S = 120{,}0$ N
$\Delta s = 75{,}0$ cm
$F_G = 600{,}0$ N
60 kg
60 kg
$\Delta h = 15$ cm

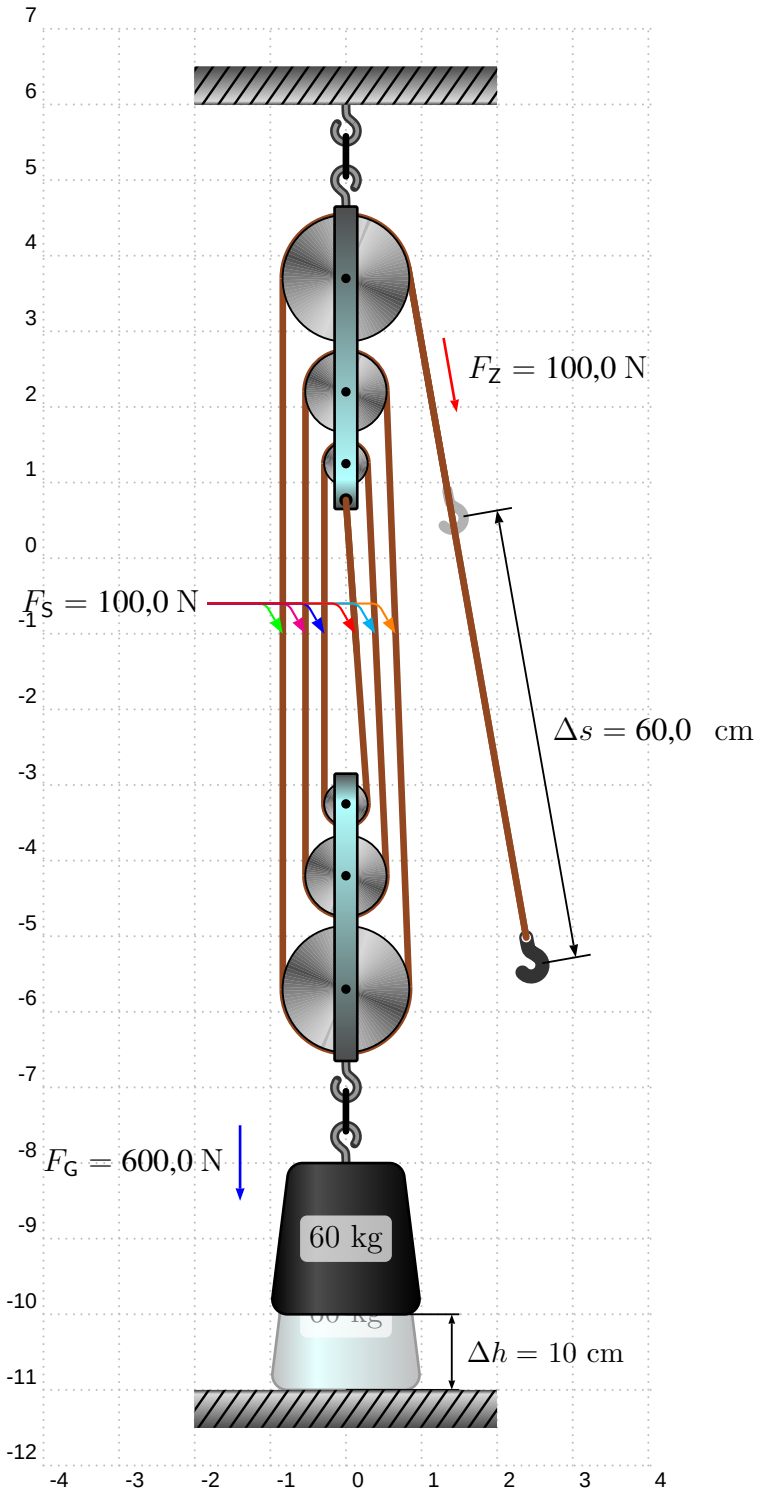
$F_Z = 100{,}0$ N
$F_S = 100{,}0$ N
$\Delta s = 60{,}0$ cm
$F_G = 600{,}0$ N
60 kg
$\Delta h = 10$ cm